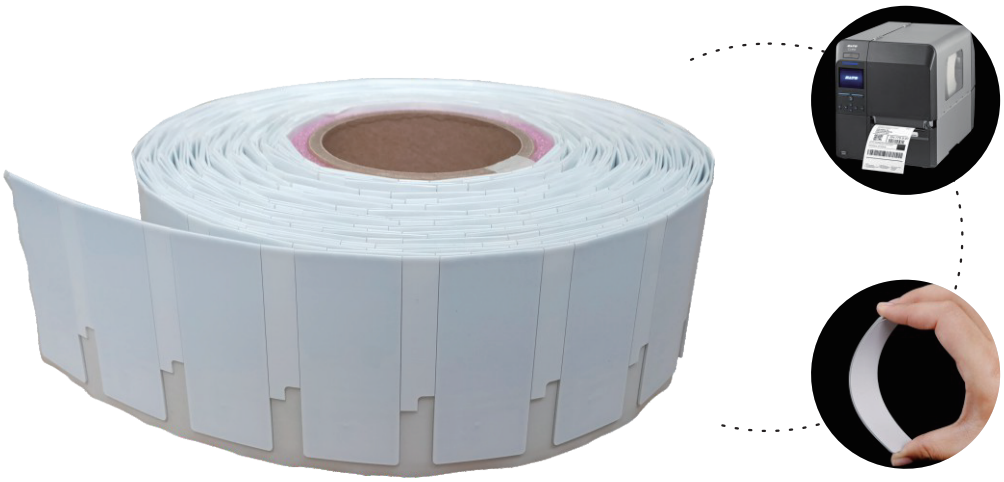

Flexible & Printable UHF On-metal Label

This flexible label can be stuck on metallic asset easily, specially for irregular and uneven surface, it has good performance on metal surface, can be print and encoding by RFID printer.

Physical Features:

Model:	OS 7012
Material:	PET/Aluminum Foil/Foam
Dimensions:	70 x 30 x 1 mm(L x W x T)
Working Temp:	-40~+85℃
Storage Temp:	23±3 ℃
Storage Humidity:	50±15 %RH
IP Code:	IP68,test for 5 hours at 1m deep water

RFID Features:

RFID Standard:	ISO/IEC 18000-6C (EPC Gen2)
Chip Type:	Impinj Monza R6/R6-P
Memory:	MR6:User - N/A; EPC - 96bits; TID - 96 bits MR6-P:User - 32(64) bits; EPC - 128(96) bits; TID - 96 bits
Read Range(Fixed Reader FCC):	8.0 m,on metal; 4.0 m, off metal
Read Range(Fixed Reader ETSI):	6.0 m,on metal; 3.0 m, off metal

Other Features:

Data Storage:	> 10 years
Re-write:	100,000 times
Installation:	Adhesive
Support Printer:	SATO CL4NX, Zebra ZT410 Silverline, Postek TX3r, etc.
Customization:	Printing LOGO, Barcode, Serial number, Encoding, Designing,etc
Package:	Reel core inner diameter: 76.2 mm / 3" , Outside diameter < 220 mm / 8.7", 500pcs/roll.
Application:	Metallic container tracking | Equipment&device tracking Warehouse shelf | Automotive components tracking IT asset tracking, etc.

Dimensions:

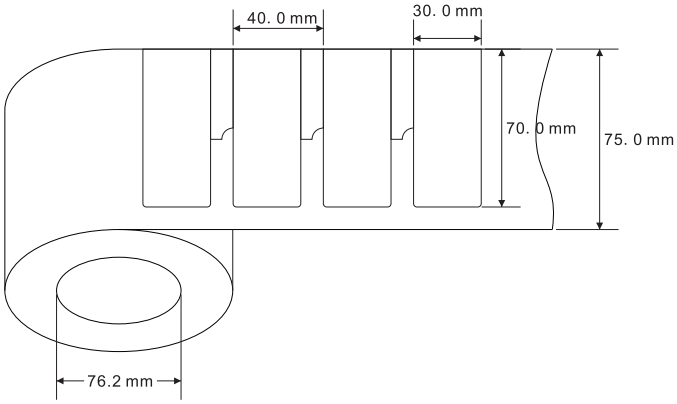

Read Range:

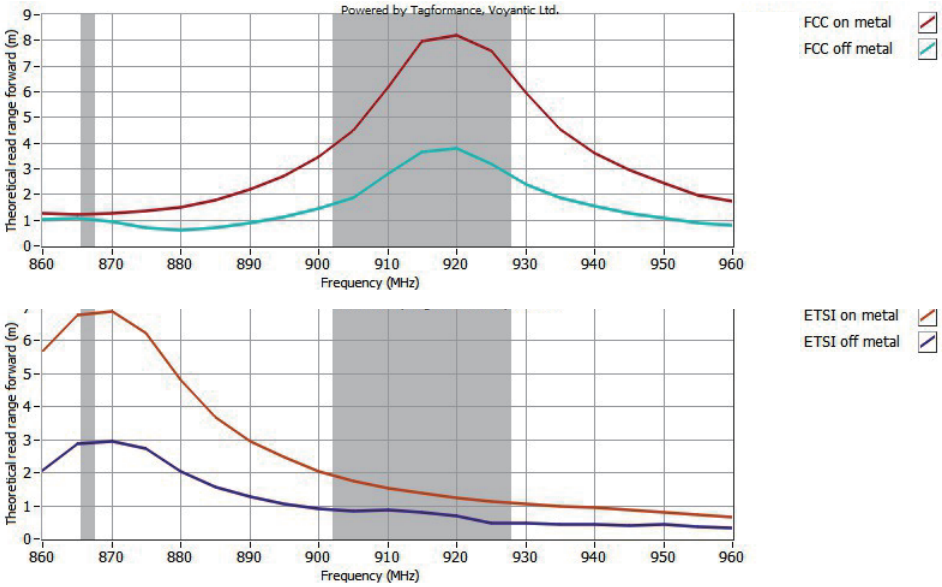

Application:

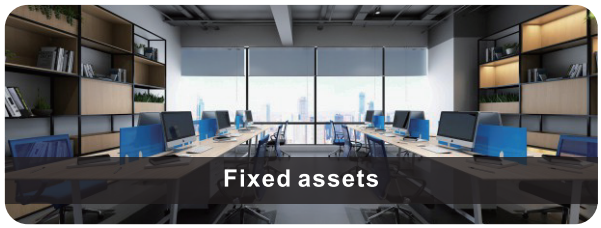

Dongguan OSRFID Technology Co.,Ltd
www.osrfidglobal.com
Email:inquiry@osrfid.com